Westfalia Separator Food Tec

Mechanical Separation Division

SOMEX ENERGY S.A.

http://www.somexproyectos.com/somexenergy/biodiesel/

Biodiesel and Glycerine Plant

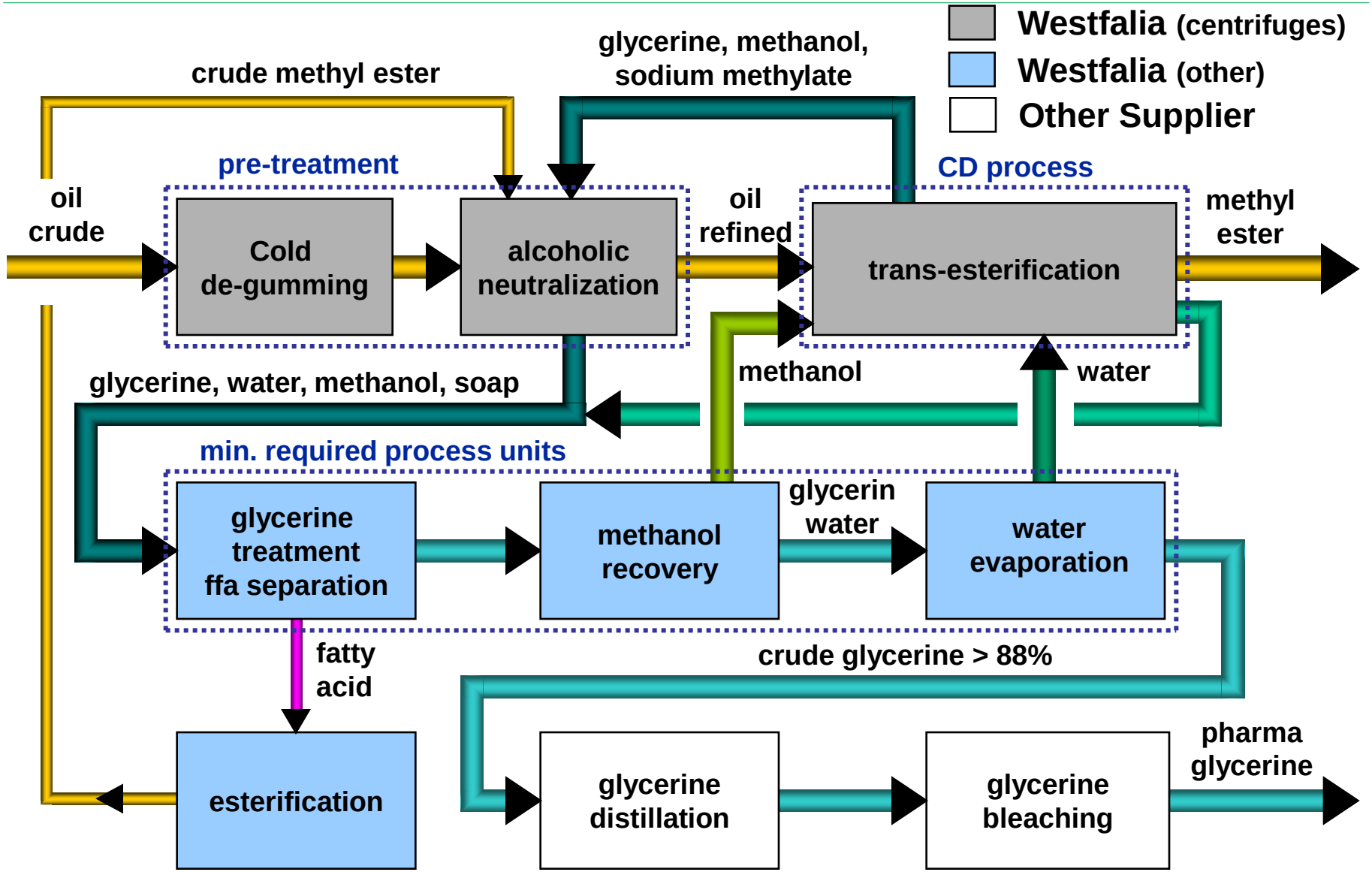

Cold degumming plus alcohol Neutralisation

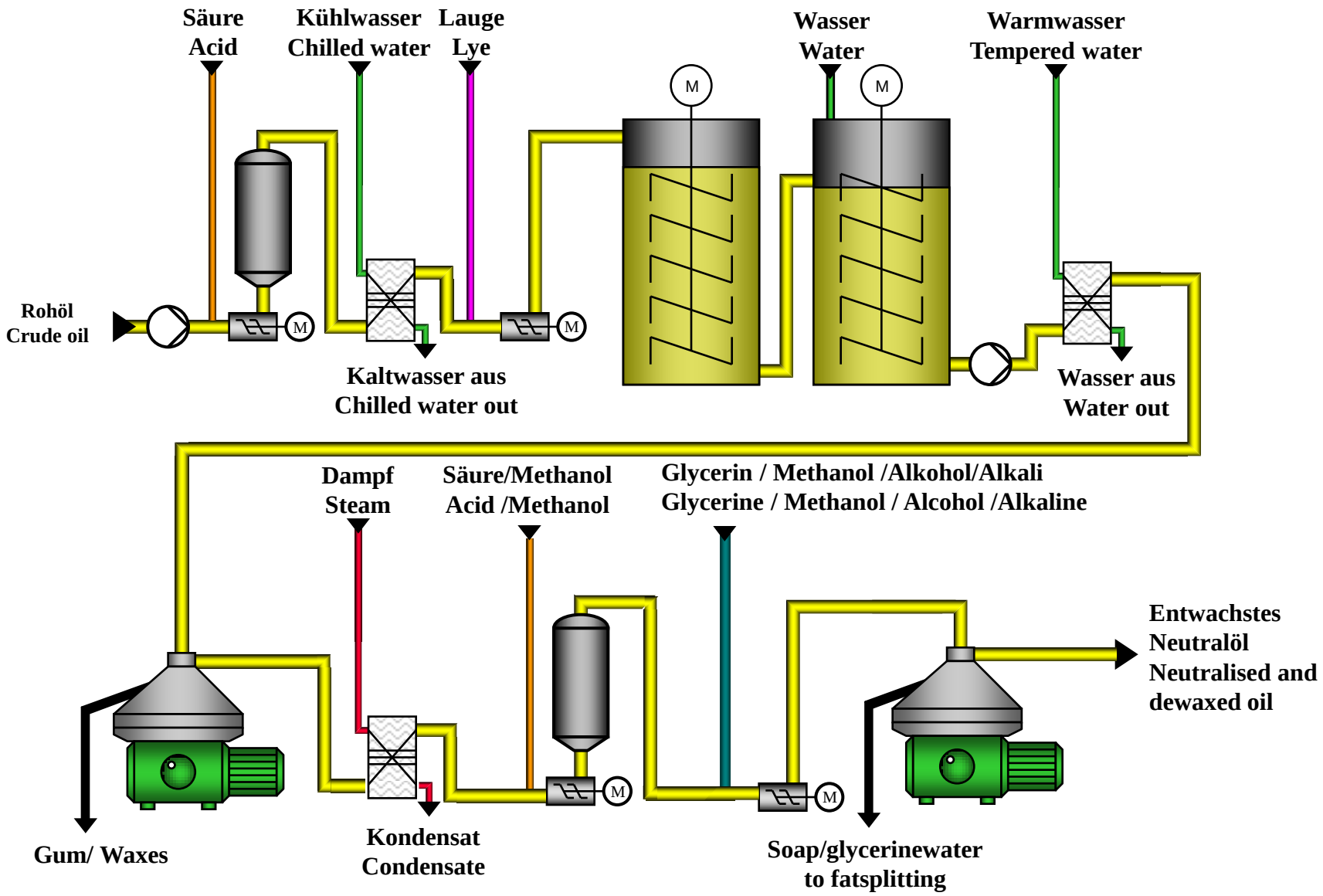

Westfalia CD-Process of Trans-Esterification (for some soyabeen crude oils)

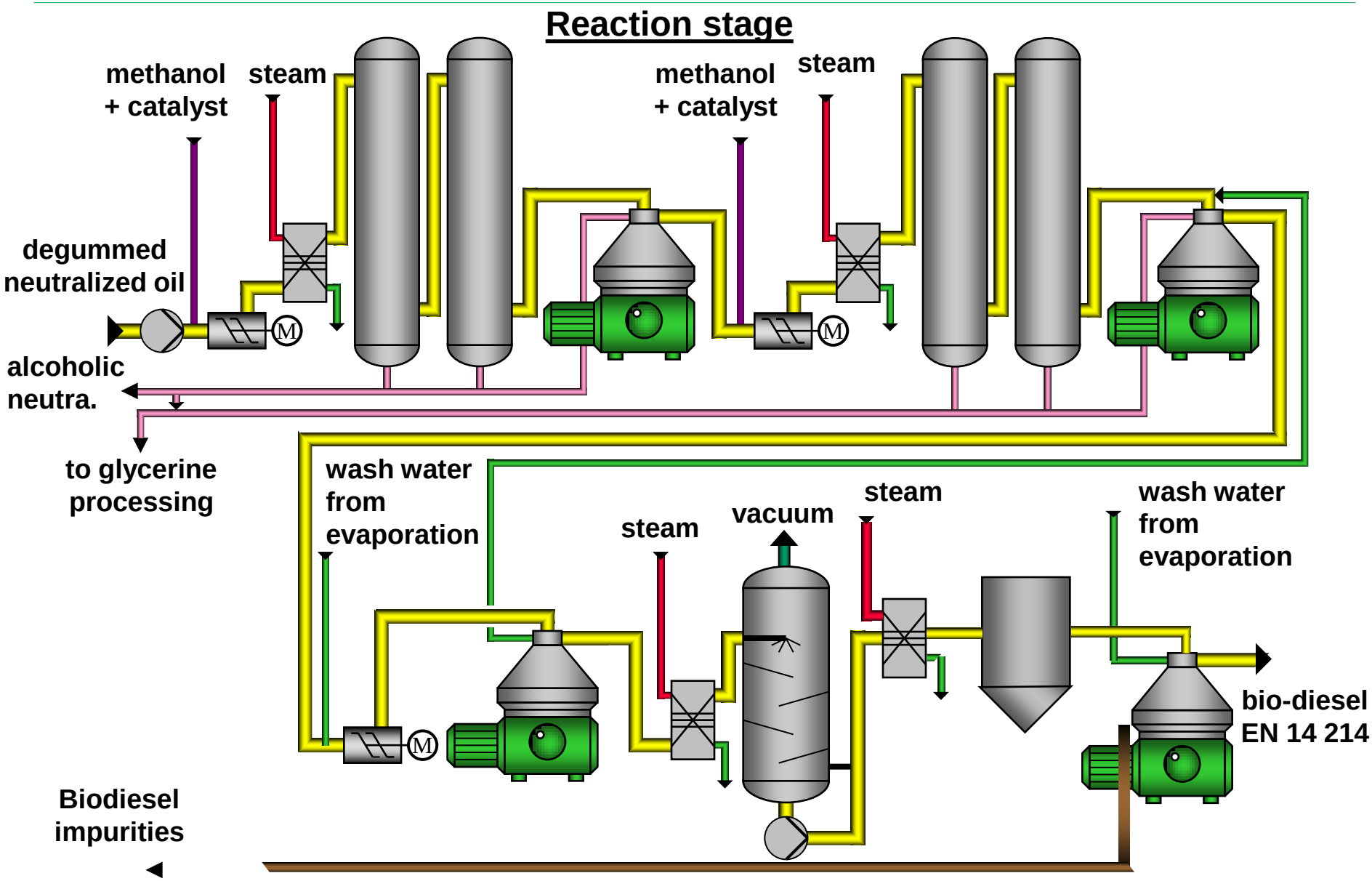

Oils and fats processing
Soap Splitting and Fatty Acid Separation

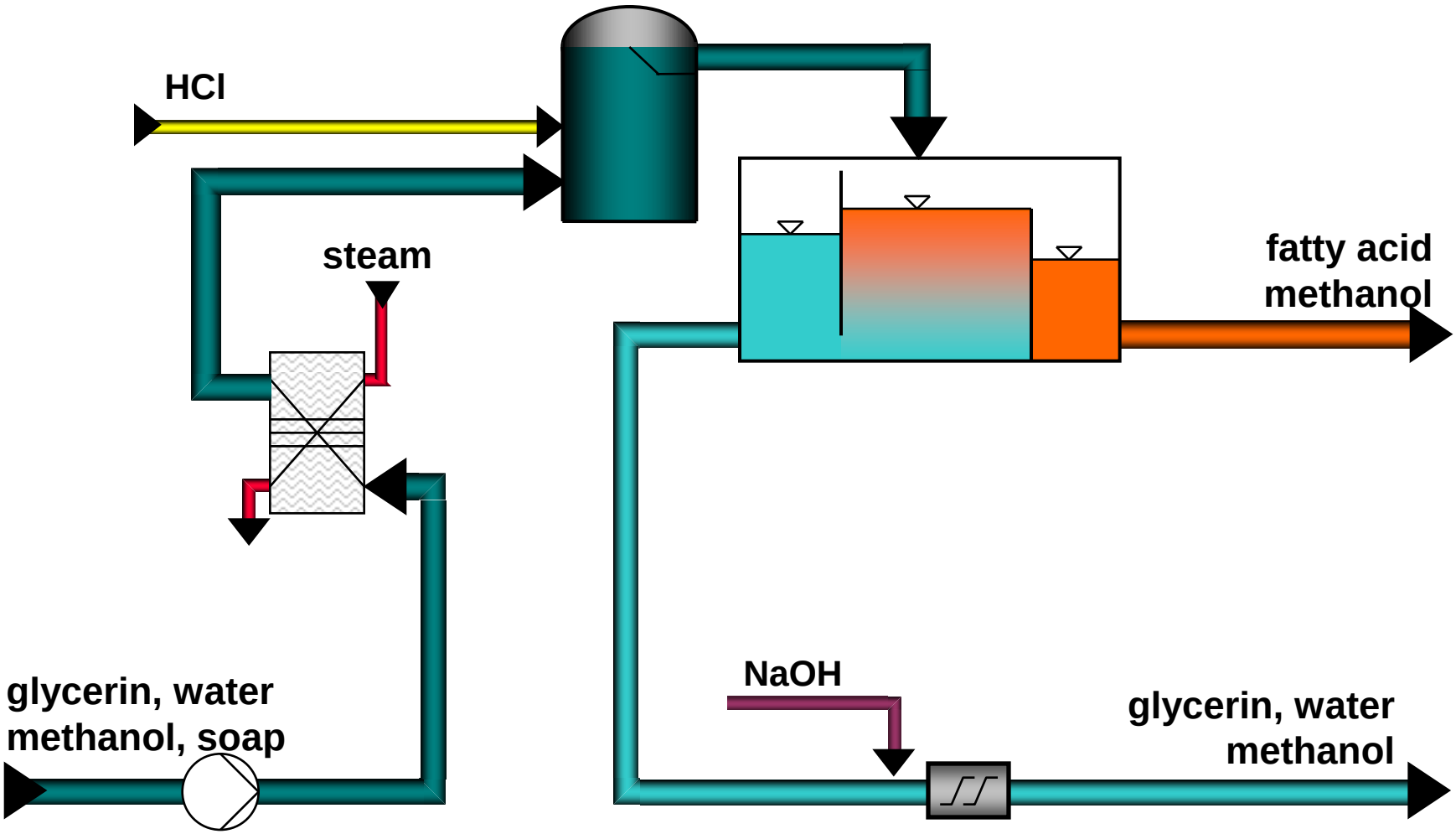

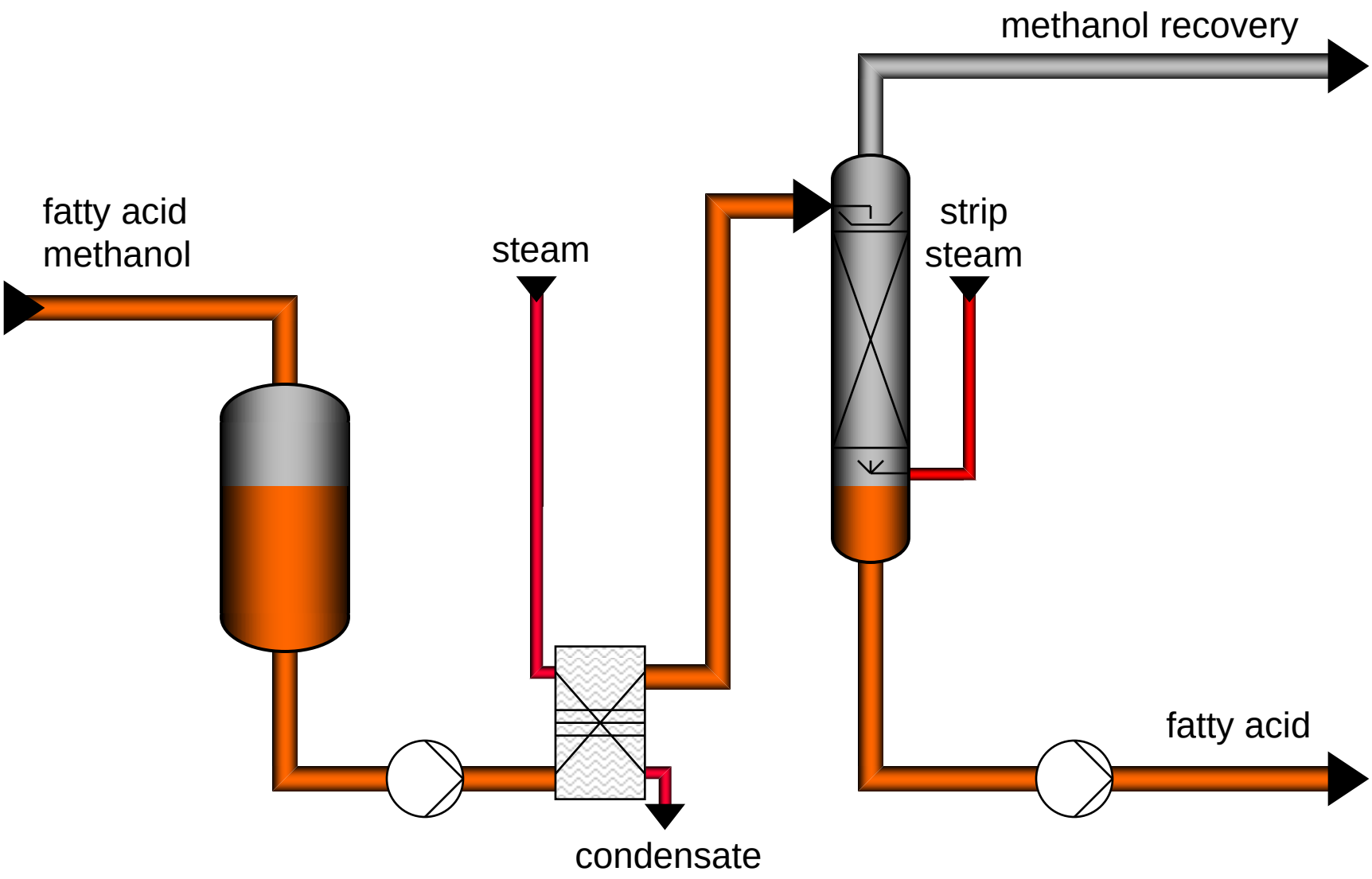
methanol recovery
fatty acid
methanol
steam
strip
steam
fatty acid
condensate

Westfalia Separator Food Tec

Mechanical Separation Division

Esterification Plant

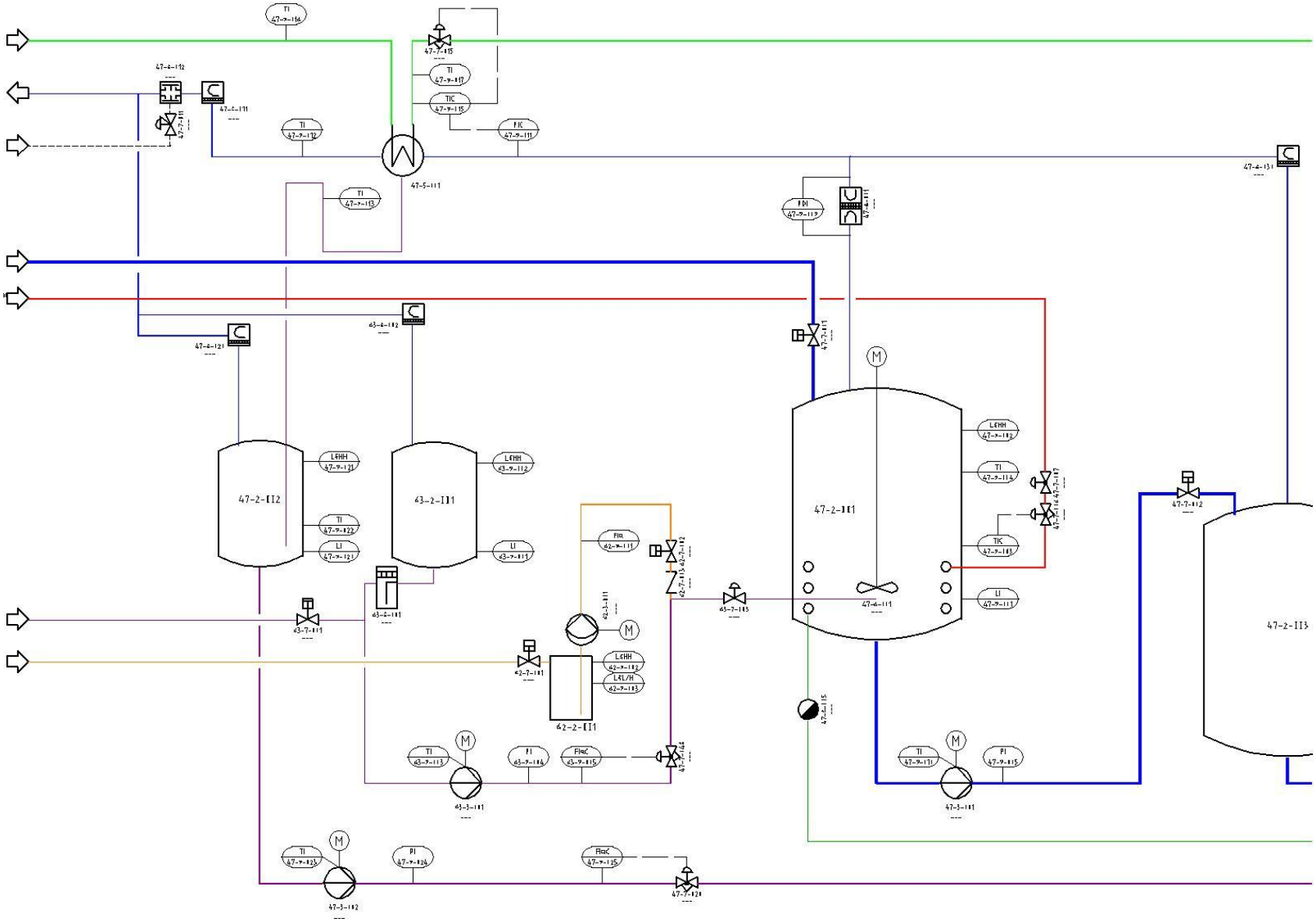

Oils and Fats Processing

Methanol Recovery by Distillation

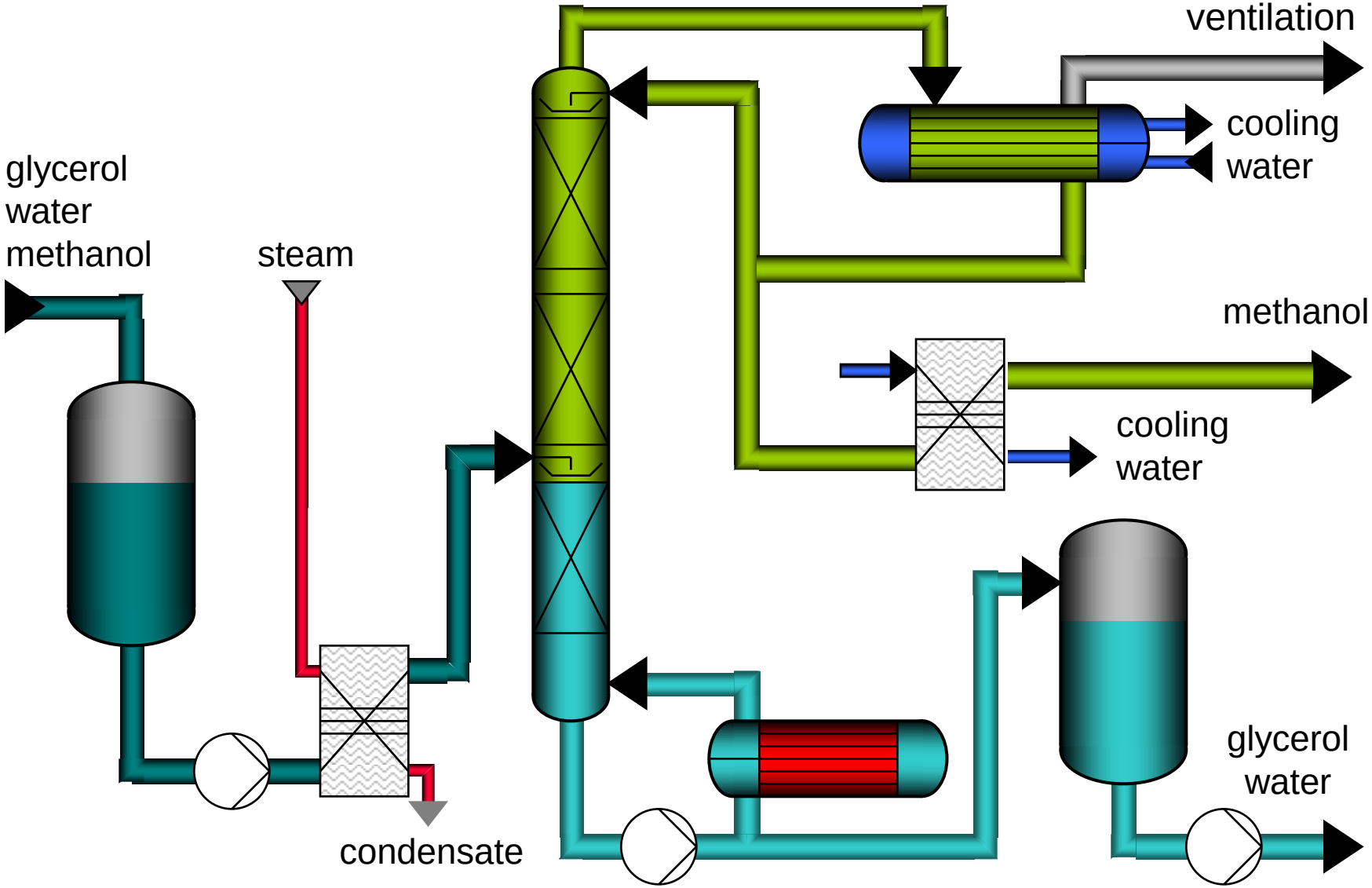

Oils and Fats Processing
Glycerol Water Evaporation

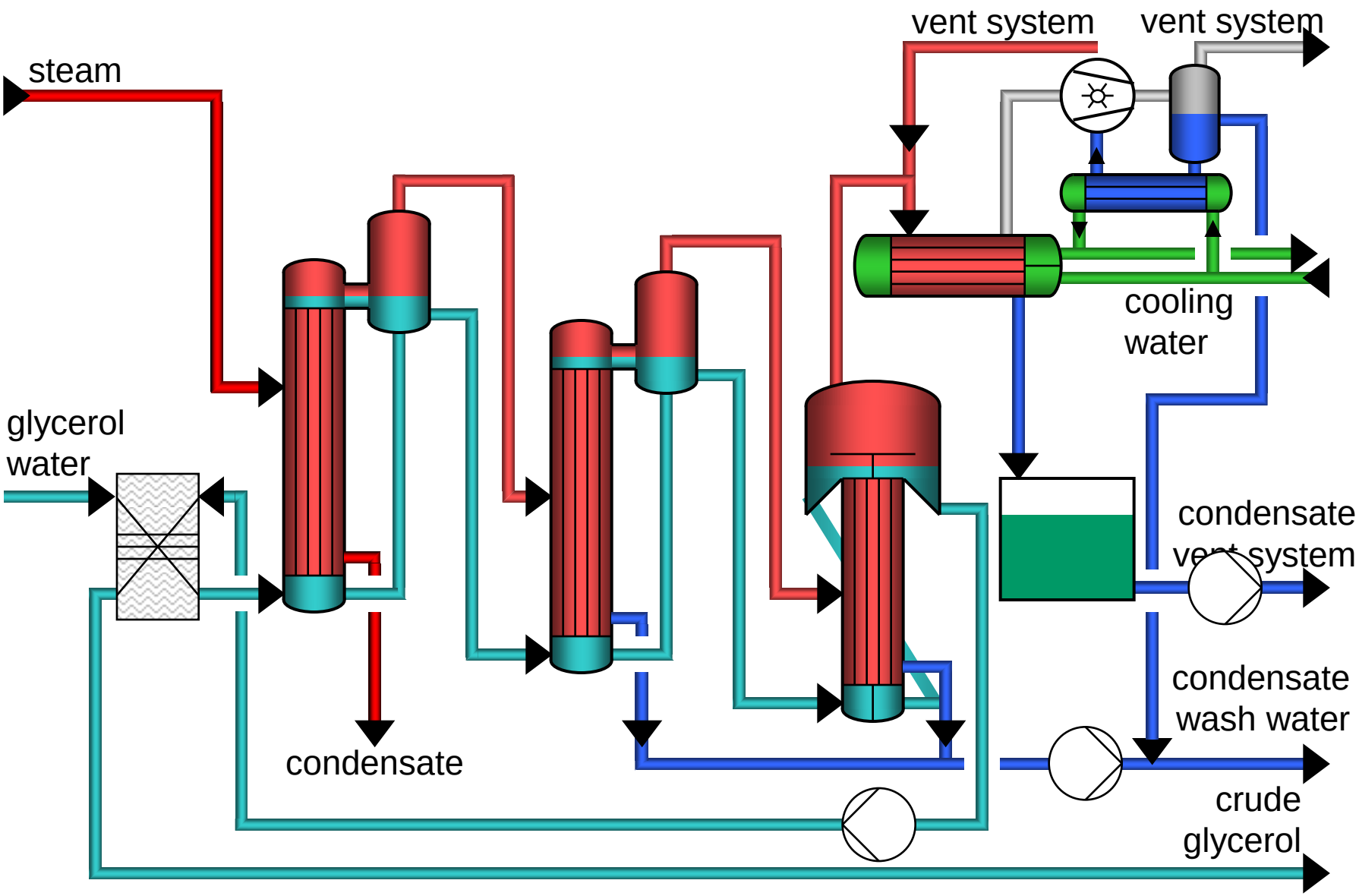
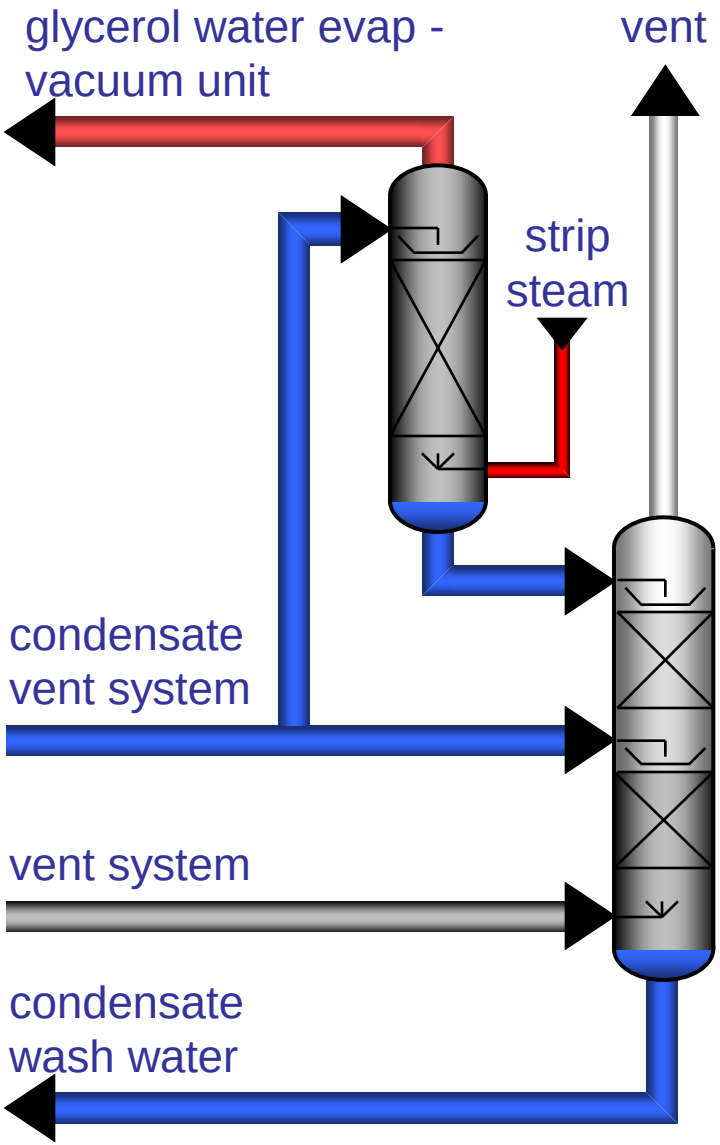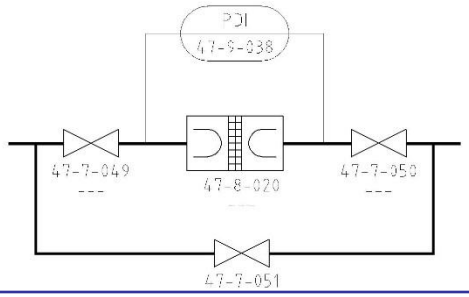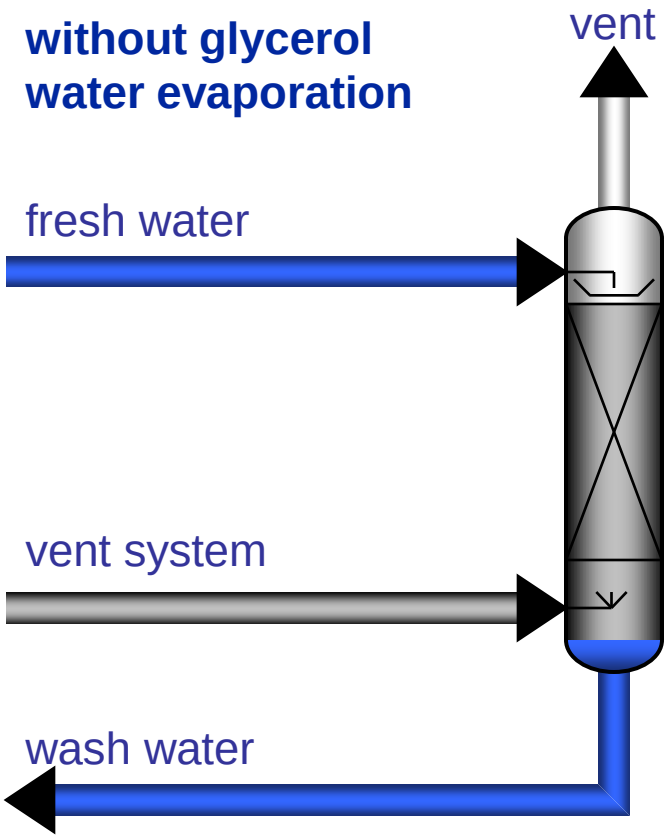
Vent Systems