FAB
ACCESSORIES

DESCRIPTION

Oil bath air filter and cyclone prefilter

MATERIALS

Housing: Black painted steel
Internal parts: Steel
Filter element: Zinc painted steel (stainless steel on request)
Prefilter transparent housing and buffle: plastic material
Seals: NBR Nitrile

FLOW RATE

From 3.000 to 12.000 l/min

WORKING TEMPERATURE

Max working temperature: 95°C

HYDRAULIC DIAGRAM

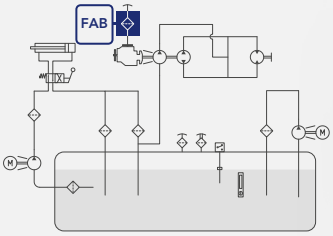

Is this datasheet the latest release? Please check on our website.

SIZING INSTRUCTIONS

$$Q = \frac{C \times N}{K}$$

Q (lt/min) = Flow rate
C (lt) = Total displacement
N = RPM
K = Coefficient

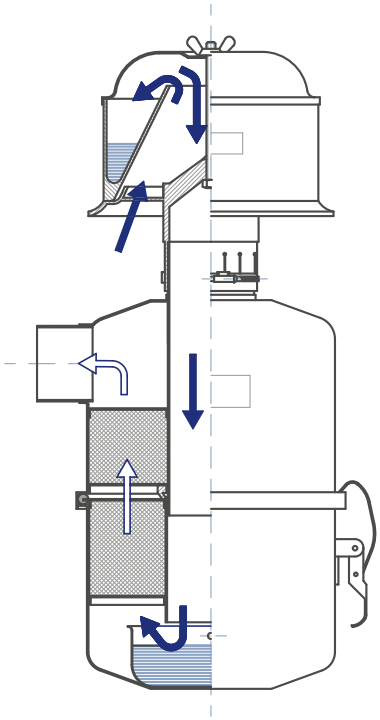

K - coefficient for engines

Cylinders	2 Strokes	4 Strokes
1	K = 0,42	K = 0,52
2	K = 0,83	K = 1
3	K = 0,83	K = 1,6
4 ÷ 8	K = 0,83	K = 2

K - coefficient for compressors

Cylinders	K
1	K = 1,2
2	K = 2,4

DIMENSIONAL LAYOUT

Filter	l/min	D1	D2	H1	H2	H3	H4	H5	H6	H7	L	Kg
6000.6	3000	57	164	293	252	129	123	41	201	92	116	2,5
6000.7	4000	57	164	348	307	156	151	41	260	88	116	3,9
6000.8	5500	65	187	385	334	172	162	51	273	112	131	4,5
6000.9	8000	93	266	451	397	209	188	54	321	130	182	7,5
6000.10	10000	93	266	529	475	246	229	54	399	130	179	9,5
6000.11	12000	114	322	558	503	262	241	55	412	146	210	13,5

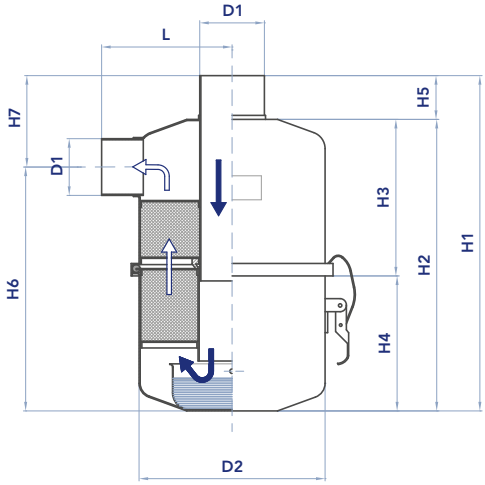

CYCLONE PREFILTER

Pre-filter	For filter	l/min	D1	D2	H1	H2	H3	Kg
6025.4	6000.6 - 6000.7	4000	57	140	175	115	60	0,4
6025.5	6000.8	6000	65	154	185	115	70	0,6
6025.6	6000.9 - 6000.10	10000	93	222	235	175	60	1,15
6025.6S2	-	11000	102	222	235	175	60	1,13
6025.7	6000.11	12000	114	222	235	175	60	1,1

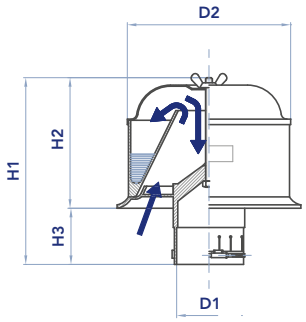

SPARE FILTER ELEMENT
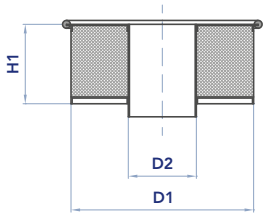
Filter	For filter	D1	D2	H1
5702.6	6000.6	161	60	70
5702.7	6000.7	161	60	105
5702.8	6000.8	184	68	105
5702.9	6000.9	262	96	120
5702.10	6000.10	262	96	170
5702.11	6000.11	318	117	185